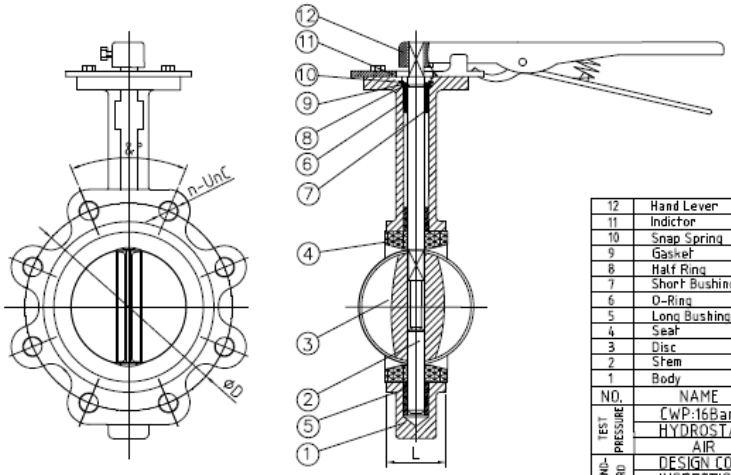

SIZE	DN	L	ØD	n-UnC	&°
2"	50	42	120.7	4-UnC 5/8"	90°
2 1/2"	65	44.7	139.7	4-UnC 5/8"	90°
3"	80	45.2	152.4	4-UnC 5/8"	90°
4"	100	52.1	190.5	8-UnC 5/8"	45°
5"	125	54.4	215.9	8-UnC 3/4"	45°
6"	150	55.8	241.3	8-UnC 3/4"	45°

NO.	NAME	MATERIAL	QTY
12	Hand Lever	ASSEMBLY	1
11	Indictor	SS304	1
10	Snap Spring	SK7	1
9	Gasket	SS316	1
8	Half Ring	SS316	1
7	Short Bushing	PTFE	2
6	O-Ring	NBR	1
5	Long Bushing	PTFE	2
4	Seat	Butylo	1
3	Disc	A351 CF8M + Lined Butylo	1
2	Stem	A276 SS316	1
1	Body	Ductile Iron A536 + Epoxy	1

TEST PRESSURE		SHELL	SEAL
	CWP:16Bar		
	HYDROSTATIC	24 bar	17,6 bar
	AIR	6 bar	6 bar

STANDARD	
DESIGN CODE	API 609
INSPECTION & TEST	API 598
END STANDARD	ASME B16.5 150LB
FACE TO FACE	API609

TITLE :HANDLEVER CONCENTRIC BUTTERFLY VALVE
SBM-PTV MODEL AR-2 NPS 2"-6" - 150LB - LUG

APPROVED		DWG NO.	REV
CHECKED			
DRAWN			
DESIGNED		SCALE	UNIT mm

1	Nondestructive Testing		
1.1	Pressure Test	API 598	Yes
1.2	Chemical composition certification	Mandatory	Yes
1.3	Penetrant Test	All Body Surface	Yes
1.4	Magnetic particle testing	All Body Surface	Yes

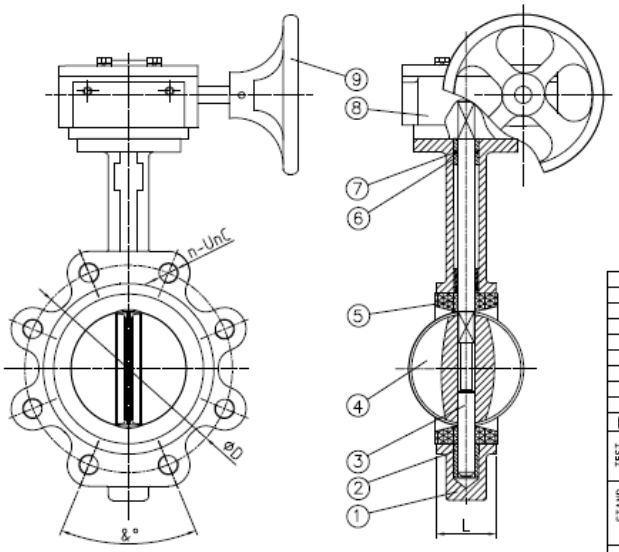

SIZE	DN	L	ØD	n-UnC	&°
8"	200	60.6	298.5	8- UnC 3/4"	45°

NO.	NAME	MATERIAL	QTY
9	Hand Wheel	GGG50	1
8	Worm Gear	GGG50	1
7	O-Ring	NBR	1
6	Short Bushing	PTFE	2
5	Seat	Butylo	1
4	Disc	A351 CF8M + Lined Butylo	1
3	Stem	A276 SS316	1
2	Long Bushing	PTFE	2
1	Body	Ductile Iron A536 + Epoxy	1

TEST PRESSURE		SHELL	SEAL
	CWP:16Bar		
	HYDROSTATIC	24 bar	17,6 bar
	AIR	6 bar	6 bar

STANDARD	
DESIGN CODE	API 609
INSPECTION & TEST	API 598
END STANDARD	ASME B16.5 150LB
FACE TO FACE	API609

TITLE : GEAR OPERATION CONCENTRIC BUTTERFLY VALVE
SBM-PTV MODEL AR-2 NPS 8" - 150LB - LUG

APPROVED		DWG NO.	REV
CHECKED			
DRAWN			
DESIGNED		SCALE	UNIT mm

1	Nondestructive Testing		
1.1	Pressure Test	API 598	Yes
1.2	Chemical composition certification	Mandatory	Yes
1.3	Penetrant Test	All Body Surface	Yes
1.4	Magnetic particle testing	All Body Surface	Yes